UAM
UNIVERSIDAD AUTONOMA
DE MADRID

SOLICITUD DE AUTORIZACIÓN DE DEFENSA DE LA TESIS DOCTORAL

D. / Dª
Nombre Roberto **Apellidos** Rubio Nuñez

Siendo su Director/a de Tesis:
Dr./Dra. Óscar García Prada

Título de la Tesis: Higgs bundles and Hermitian symmetric spaces

La tesis está sometida a procesos de confidencialidad: NO
La tesis se presenta como compendio de publicaciones: NO

Programa de doctorado en el que está matriculado/a... Matemáticas
Facultad / Escuela ... Ciencias

SOLICITA que a la vista de la documentación aportada sea admitida a trámite de autorización a defensa la adjunta Tesis Doctoral.

Madrid, a 12 de MARZO de 2012

X

X G

X

compact orientable
surface of genus g

G

simple
Lie group

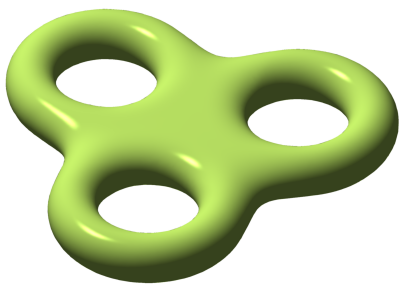

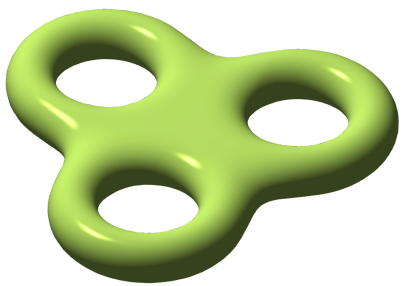

$$\pi_1 X = \langle a_1, b_1, \ldots, a_g, b_g \ : \ \prod_{j=1}^{g} [a_j, b_j] = 1 \rangle$$

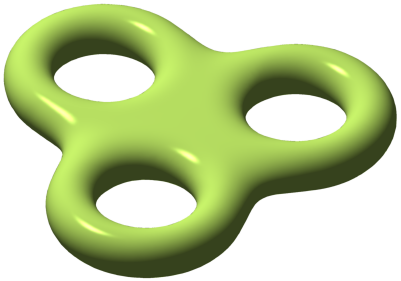

$$\pi_1 X = \langle a_1, b_1, \ldots, a_g, b_g \ : \ \prod_{j=1}^{g} [a_j, b_j] = 1 \rangle$$

$$\rho : \pi_1 X \to G$$

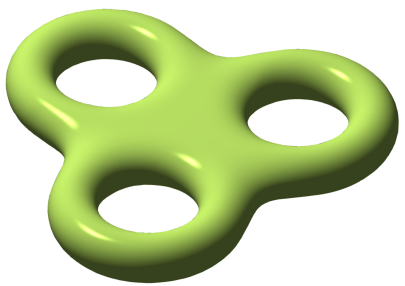

$$\pi_1 X = \langle a_1, b_1, \ldots, a_g, b_g \ : \ \prod_{j=1}^{g} [a_j, b_j] = 1 \rangle$$

$$\rho : \pi_1 X \to G$$

is given by an element of G^{2g}

$$\mathrm{Hom}(\pi_1 X, G)$$

$\mathrm{Hom}(\pi_1 X, G)$ is a subvariety of G^{2g}

$\mathrm{Hom}(\pi_1 X, G)$ is a subvariety of G^{2g}
where G acts by conjugation

$\mathrm{Hom}(\pi_1 X, G)$ is a subvariety of G^{2g}
where G acts by conjugation

$$\mathcal{R}(\pi_1 X, G)$$

Moduli space of representations

$\mathrm{Hom}(\pi_1 X, G)$ is a subvariety of G^{2g}
where G acts by conjugation

$$\mathcal{R}(\pi_1 X, G) := \mathrm{Hom}^+(\pi_1 X, G)$$

Moduli space of representations

$\mathrm{Hom}(\pi_1 X, G)$ is a subvariety of G^{2g}
where G acts by conjugation

$$\mathcal{R}(\pi_1 X, G) := \mathrm{Hom}^+(\pi_1 X, G)/G$$

Moduli space of representations

$$\mathcal{R}(\pi_1 X, G)$$

$$\mathcal{R}(\pi_1 X, G) \quad \underset{\substack{\text{Donaldson, Corlette} \\ X \text{ Riemann surface}}}{\Longleftrightarrow}$$

$$\mathcal{R}(\pi_1 X, G) \quad \underset{\substack{\text{Donaldson, Corlette} \\ X \text{ Riemann surface}}}{\Longleftrightarrow} \quad \begin{array}{l}\text{Reductive flat} \\ G\text{-connections}\end{array}$$

$$\mathcal{R}(\pi_1 X, G) \quad \underset{\substack{\text{Donaldson, Corlette} \\ X \text{ Riemann surface}}}{\Longleftrightarrow} \quad \begin{array}{c}\text{Reductive flat} \\ G\text{-connections}\end{array}$$

$$\Updownarrow$$

$$\mathcal{R}(\pi_1 X, G) \quad \underset{\substack{\text{Donaldson, Corlette} \\ X \text{ Riemann surface}}}{\Longleftrightarrow} \quad \text{Reductive flat } G\text{-connections}$$

$$\Updownarrow$$

Solutions to
Hitchin equations

$\mathcal{R}(\pi_1 X, G)$ $\Longleftrightarrow$ Reductive flat G-connections

Donaldson, Corlette

X Riemann surface

$\Updownarrow$

$\Longleftrightarrow$ Solutions to Hitchin equations

Hitchin, Simpson,

Bradlow, García-Prada,

Gothen, Mundet i Riera

$\mathcal{R}(\pi_1 X, G)$ $\Longleftrightarrow$ Reductive flat G-connections

Donaldson, Corlette

X Riemann surface

$\Updownarrow$

Polystable G-Higgs bundles on X $\Longleftrightarrow$ Solutions to Hitchin equations

Hitchin, Simpson,

Bradlow, García-Prada,

Gothen, Mundet i Riera

$\mathcal{R}(\pi_1 X, G)$ $\Longleftrightarrow$ Reductive flat G-connections

Donaldson, Corlette

X Riemann surface

$\Updownarrow$ $\Updownarrow$

Polystable G-Higgs bundles on X $\Longleftrightarrow$ Solutions to Hitchin equations

Hitchin, Simpson,

Bradlow, García-Prada,

Gothen, Mundet i Riera

RIEMANN

SURFACE

G-Higgs bundle

G-Higgs bundle
for G real, non-compact, simple Lie group

G-Higgs bundle
for G real, non-compact, simple Lie group

$H \subset G$, maximal compact subgroup

G-Higgs bundle
for G real, non-compact, simple Lie group

$H \subset G$, maximal compact subgroup
$\mathfrak{g} = \mathfrak{h} + \mathfrak{m}$,

G-Higgs bundle
for G real, non-compact, simple Lie group

$H \subset G$, maximal compact subgroup
$\mathfrak{g} = \mathfrak{h} + \mathfrak{m}$, $\mathrm{Ad} : H^{\mathbb{C}} \to \mathrm{Aut}(\mathfrak{m}^{\mathbb{C}})$

G-Higgs bundle
for G real, non-compact, simple Lie group

$H \subset G$, maximal compact subgroup
$\mathfrak{g} = \mathfrak{h} + \mathfrak{m}$, $\mathrm{Ad} : H^{\mathbb{C}} \to \mathrm{Aut}(\mathfrak{m}^{\mathbb{C}})$

E, principal $H^{\mathbb{C}}$-bundle
$\varphi \in H^0(E(\mathfrak{m}^{\mathbb{C}}) \otimes K)$

G-Higgs bundle
for G real, non-compact, simple Lie group

$H \subset G$, maximal compact subgroup
$\mathfrak{g} = \mathfrak{h} + \mathfrak{m}$, $\mathrm{Ad} : H^{\mathbb{C}} \to \mathrm{Aut}(\mathfrak{m}^{\mathbb{C}})$

E, principal $H^{\mathbb{C}}$-bundle
$\varphi \in H^0(E(\mathfrak{m}^{\mathbb{C}}) \otimes K)$

$\mathrm{Sp}(2n, \mathbb{R})$-Higgs bundle

$\mathrm{Sp}(2n, \mathbb{R})$-Higgs bundle

$H = U(n)$, maximal compact subgroup

$\mathrm{Sp}(2n, \mathbb{R})$-Higgs bundle

$H = U(n)$, maximal compact subgroup
$\mathrm{Ad} : \mathrm{GL}(n, \mathbb{C}) \to Sym^2\mathbb{C}^n \oplus Sym^2(\mathbb{C}^n)^*$

$\mathrm{Sp}(2n, \mathbb{R})$-Higgs bundle

$H = U(n)$, maximal compact subgroup
$\mathrm{Ad} : \mathrm{GL}(n, \mathbb{C}) \to Sym^2\mathbb{C}^n \oplus Sym^2(\mathbb{C}^n)^*$

E, principal $\mathrm{GL}(n, \mathbb{C})$-bundle

$\mathrm{Sp}(2n, \mathbb{R})$-Higgs bundle

$H = U(n)$, maximal compact subgroup
$\mathrm{Ad} : \mathrm{GL}(n, \mathbb{C}) \to Sym^2\mathbb{C}^n \oplus Sym^2(\mathbb{C}^n)^*$

E, principal $\mathrm{GL}(n, \mathbb{C})$-bundle

$\varphi \in H^0(E(Sym^2\mathbb{C}^n) \otimes K)$

$\mathrm{Sp}(2n, \mathbb{R})$-Higgs bundle

$H = U(n)$, maximal compact subgroup
$\mathrm{Ad} : \mathrm{GL}(n, \mathbb{C}) \to Sym^2\mathbb{C}^n \oplus Sym^2(\mathbb{C}^n)^*$

E, principal $\mathrm{GL}(n, \mathbb{C})$-bundle

$\varphi \in H^0(E(Sym^2\mathbb{C}^n) \otimes K)$

$\oplus\ H^0(E(Sym^2(\mathbb{C}^n)^*) \otimes K)$

$\mathrm{Sp}(2n, \mathbb{R})$-Higgs bundle

$H = U(n)$, maximal compact subgroup
$\mathrm{Ad} : \mathrm{GL}(n, \mathbb{C}) \to Sym^2\mathbb{C}^n \oplus Sym^2(\mathbb{C}^n)^*$

E, principal $\mathrm{GL}(n, \mathbb{C})$-bundle

V, vector bundle, $\mathrm{rk}\, V = n$

$$\varphi \in H^0(E(Sym^2\mathbb{C}^n) \otimes K)$$
$$\oplus\, H^0(E(Sym^2(\mathbb{C}^n)^*) \otimes K)$$

$\mathrm{Sp}(2n, \mathbb{R})$-Higgs bundle

$H = U(n)$, maximal compact subgroup
$\mathrm{Ad} : \mathrm{GL}(n, \mathbb{C}) \to Sym^2\mathbb{C}^n \oplus Sym^2(\mathbb{C}^n)^*$

E, principal $\mathrm{GL}(n, \mathbb{C})$-bundle

$\varphi \in H^0(E(Sym^2\mathbb{C}^n) \otimes K)$
$\oplus\ H^0(E(Sym^2(\mathbb{C}^n)^*) \otimes K)$

V, vector bundle, $\mathrm{rk}\, V = n$

$\beta : V^* \to V \otimes K$ symmetric

$\mathrm{Sp}(2n, \mathbb{R})$-Higgs bundle

$H = U(n)$, maximal compact subgroup
$\mathrm{Ad} : \mathrm{GL}(n, \mathbb{C}) \to Sym^2\mathbb{C}^n \oplus Sym^2(\mathbb{C}^n)^*$

E, principal $\mathrm{GL}(n, \mathbb{C})$-bundle

$\varphi \in H^0(E(Sym^2\mathbb{C}^n) \otimes K)$

$\oplus\ H^0(E(Sym^2(\mathbb{C}^n)^*) \otimes K)$

V, vector bundle, $\mathrm{rk}\, V = n$

$\beta : V^* \to V \otimes K$ symmetric

$\gamma : V \to V^* \otimes K$ symmetric

$$\gamma : \quad V \qquad\qquad \longrightarrow \quad V^* \otimes K \qquad \text{isom} + (\text{sym})$$

$$
\begin{array}{llll}
\gamma: & V & \longrightarrow & V^* \otimes K \quad \text{isom} + (\text{sym}) \\
\gamma: & V \otimes K^{-1/2} & \longrightarrow & V^* \otimes K^{1/2} \quad \text{isom} + (\text{sym})
\end{array}
$$

$$
\begin{array}{llll}
\gamma: & V & \longrightarrow & V^* \otimes K \quad \text{isom} + (\text{sym}) \\
\gamma: & V \otimes K^{-1/2} & \longrightarrow & V^* \otimes K^{1/2} \quad \text{isom} + (\text{sym})
\end{array}
$$

$$
W = V^* \otimes K^{1/2}
$$

$$
\begin{array}{llll}
\gamma: & V & \longrightarrow & V^* \otimes K \quad \text{isom} + (\text{sym}) \\
\gamma: & V \otimes K^{-1/2} & \longrightarrow & V^* \otimes K^{1/2} \quad \text{isom} + (\text{sym})
\end{array}
$$

$$
W = V^* \otimes K^{1/2}
$$

$$
\gamma: \quad W^* \quad \longrightarrow \quad W \quad \text{isom} + (\text{sym})
$$

$$
\begin{array}{llll}
\gamma: & V & \longrightarrow & V^* \otimes K \quad \text{isom} + (\text{sym}) \\
\gamma: & V \otimes K^{-1/2} & \longrightarrow & V^* \otimes K^{1/2} \quad \text{isom} + (\text{sym})
\end{array}
$$

$$
W = V^* \otimes K^{1/2}
$$

$$
\gamma: \quad W^* \quad \longrightarrow \quad W \quad \text{isom} + (\text{sym})
$$

(W, γ) is a principal $\mathrm{O}(n, \mathbb{C})$-bundle

$$\begin{array}{llll} \gamma: & V & \longrightarrow & V^* \otimes K & \text{isom} + (\text{sym}) \\ \gamma: & V \otimes K^{-1/2} & \longrightarrow & V^* \otimes K^{1/2} & \text{isom} + (\text{sym}) \end{array}$$

$$W = V^* \otimes K^{1/2}$$

$$\gamma: \quad W^* \quad \longrightarrow \quad W \quad \text{isom} + (\text{sym})$$

(W, γ) is a principal $\mathrm{O}(n, \mathbb{C})$-bundle

$$\beta: \quad V^* \quad \longrightarrow \quad V \otimes K$$

$$\begin{array}{llll} \gamma: & V & \longrightarrow & V^* \otimes K & \text{isom} + (\text{sym}) \\ \gamma: & V \otimes K^{-1/2} & \longrightarrow & V^* \otimes K^{1/2} & \text{isom} + (\text{sym}) \end{array}$$

$$W = V^* \otimes K^{1/2}$$

$$\gamma: \quad W^* \quad \longrightarrow \quad W \quad \text{isom} + (\text{sym})$$

(W, γ) is a principal $\mathrm{O}(n, \mathbb{C})$-bundle

$$\begin{array}{lll} \beta: & V^* & \longrightarrow & V \otimes K \\ \beta: & V^* \otimes K^{1/2} & \longrightarrow & V \otimes K^{3/2} \end{array}$$

$$\begin{array}{llll} \gamma: & V & \longrightarrow & V^* \otimes K & \text{isom} + (\text{sym}) \\ \gamma: & V \otimes K^{-1/2} & \longrightarrow & V^* \otimes K^{1/2} & \text{isom} + (\text{sym}) \end{array}$$

$$W = V^* \otimes K^{1/2}$$

$$\gamma: \quad W^* \quad \longrightarrow \quad W \quad \text{isom} + (\text{sym})$$

(W, γ) is a principal $\mathrm{O}(n, \mathbb{C})$-bundle

$$\begin{array}{llll} \beta: & V^* & \longrightarrow & V \otimes K \\ \beta: & V^* \otimes K^{1/2} & \longrightarrow & V \otimes K^{3/2} \xrightarrow{\gamma} V^* \otimes K^{5/2} \end{array}$$

$$
\begin{array}{llll}
\gamma: & V & \longrightarrow & V^* \otimes K \quad \text{isom} + (\text{sym}) \\
\gamma: & V \otimes K^{-1/2} & \longrightarrow & V^* \otimes K^{1/2} \quad \text{isom} + (\text{sym})
\end{array}
$$

$$
W = V^* \otimes K^{1/2}
$$

$$
\gamma: \quad W^* \quad \longrightarrow \quad W \quad \text{isom} + (\text{sym})
$$

(W, γ) is a principal $\mathrm{O}(n, \mathbb{C})$-bundle

$$
\begin{array}{llll}
\beta: & V^* & \longrightarrow & V \otimes K \\
\beta: & V^* \otimes K^{1/2} & \longrightarrow & V \otimes K^{3/2} \quad \xrightarrow{\gamma} \quad V^* \otimes K^{5/2} \\
\beta: & W & &
\end{array}
$$

$$
\begin{array}{llll}
\gamma: & V & \longrightarrow & V^* \otimes K \quad \text{isom} + (\text{sym}) \\
\gamma: & V \otimes K^{-1/2} & \longrightarrow & V^* \otimes K^{1/2} \quad \text{isom} + (\text{sym})
\end{array}
$$

$$
W = V^* \otimes K^{1/2}
$$

$$
\gamma: \quad W^* \quad \longrightarrow \quad W \quad \text{isom} + (\text{sym})
$$

(W, γ) is a principal $\mathrm{O}(n, \mathbb{C})$-bundle

$$
\begin{array}{llllll}
\beta: & V^* & \longrightarrow & V \otimes K & & \\
\beta: & V^* \otimes K^{1/2} & \longrightarrow & V \otimes K^{3/2} & \xrightarrow{\gamma} & V^* \otimes K^{5/2} \\
\beta: & W & \longrightarrow & W^* \otimes K^2 & \xrightarrow{\gamma} & W \otimes K^2
\end{array}
$$

$$
\begin{array}{llll}
\gamma: & V & \longrightarrow & V^* \otimes K \quad \text{isom} + (\text{sym}) \\
\gamma: & V \otimes K^{-1/2} & \longrightarrow & V^* \otimes K^{1/2} \quad \text{isom} + (\text{sym})
\end{array}
$$

$$W = V^* \otimes K^{1/2}$$

$$
\begin{array}{llll}
\gamma: & W^* & \longrightarrow & W \quad \text{isom} + (\text{sym})
\end{array}
$$

(W, γ) is a principal $\mathrm{O}(n, \mathbb{C})$-bundle

$$
\begin{array}{llllll}
\beta: & V^* & \longrightarrow & V \otimes K & & \\
\beta: & V^* \otimes K^{1/2} & \longrightarrow & V \otimes K^{3/2} & \xrightarrow{\gamma} & V^* \otimes K^{5/2} \\
\beta: & W & \longrightarrow & W^* \otimes K^2 & \xrightarrow{\gamma} & W \otimes K^2
\end{array}
$$

$\gamma \circ \beta$ is a K^2-twisted field

(W, γ) is a principal $\mathrm{O}(n, \mathbb{C})$-bundle

$\gamma \circ \beta$ is a K^2-twisted field,

(W, γ) is a principal $\mathrm{O}(n, \mathbb{C})$-bundle

$\gamma \circ \beta$ is a K^2-twisted field,

is a real $GL(n, \mathbb{R})$-Higgs pair

(W, γ) is a principal $\mathrm{O}(n, \mathbb{C})$-bundle

$\gamma \circ \beta$ is a K^2-twisted field,

is a real $GL(n, \mathbb{R})$-Higgs pair

Relation between $\mathrm{Sp}(2n, \mathbb{R})$ and $\mathrm{GL}(n, \mathbb{R})$?

(W, γ) is a principal $\mathrm{O}(n, \mathbb{C})$-bundle

$\gamma \circ \beta$ is a K^2-twisted field,

is a real $GL(n, \mathbb{R})$-Higgs pair

Relation between $\mathrm{Sp}(2n, \mathbb{R})$ and $\mathrm{GL}(n, \mathbb{R})$?
The Hermitian symmetric space $\mathrm{Sp}(2n, \mathbb{R})/\mathrm{U}(n)$.

(W, γ) is a principal $\mathrm{O}(n, \mathbb{C})$-bundle

$\gamma \circ \beta$ is a K^2-twisted field,

is a real $GL(n, \mathbb{R})$-Higgs pair

Relation between $\mathrm{Sp}(2n, \mathbb{R})$ and $\mathrm{GL}(n, \mathbb{R})$?
The Hermitian symmetric space $\mathrm{Sp}(2n, \mathbb{R})/\mathrm{U}(n)$.

$\mathrm{GL}(n, \mathbb{R})$ is the non-compact dual of $\mathrm{U}(n)$
(the isometry group of its Shilov boundary)

(W, γ) is a principal $\mathrm{O}(n, \mathbb{C})$-bundle

$\gamma \circ \beta$ is a K^2-twisted field,

is a real $GL(n, \mathbb{R})$-Higgs pair

Relation between $\mathrm{Sp}(2n, \mathbb{R})$ and $\mathrm{GL}(n, \mathbb{R})$?
The Hermitian symmetric space $\mathrm{Sp}(2n, \mathbb{R})/\mathrm{U}(n)$.

$\mathrm{GL}(n, \mathbb{R})$ is the non-compact dual of $\mathrm{U}(n)$
(the isometry group of its Shilov boundary)

HSS $\Rightarrow$ correspondence

Higgs bundles and Hermitian symmetric spaces

How many groups of Hermitian type?

How many groups of Hermitian type?
Using Cartan's classification, there are four classical families:

- $\mathrm{SU}(p, q)$

How many groups of Hermitian type?
Using Cartan's classification, there are four classical families:

- $\mathrm{SU}(p, q)$
- $\mathrm{Sp}(2n, \mathbb{R})$

How many groups of Hermitian type?
Using Cartan's classification, there are four classical families:

- $\mathrm{SU}(p, q)$
- $\mathrm{Sp}(2n, \mathbb{R})$
- $\mathrm{SO}_0(2, n)$

How many groups of Hermitian type?
Using Cartan's classification, there are four classical families:

- $\mathrm{SU}(p, q)$
- $\mathrm{Sp}(2n, \mathbb{R})$
- $\mathrm{SO}_0(2, n)$
- $\mathrm{SO}^*(2n)$

How many groups of Hermitian type?
Using Cartan's classification, there are four classical families:

- $\mathrm{SU}(p, q)$
- $\mathrm{Sp}(2n, \mathbb{R})$
- $\mathrm{SO}_0(2, n)$
- $\mathrm{SO}^*(2n)$

And two exceptional cases:

- E_6^{-14}

How many groups of Hermitian type?
Using Cartan's classification, there are four classical families:

- $\mathrm{SU}(p, q)$
- $\mathrm{Sp}(2n, \mathbb{R})$
- $\mathrm{SO}_0(2, n)$
- $\mathrm{SO}^*(2n)$

And two exceptional cases:

- E_6^{-14}
- E_7^{-25}

How many groups of Hermitian type?
Using Cartan's classification, there are four classical families:

- $\mathrm{SU}(p, q)$
- $\mathrm{Sp}(2n, \mathbb{R})$
- $\mathrm{SO}_0(2, n)$
- $\mathrm{SO}^*(2n)$

And two exceptional cases:

- E_6^{-14}
- E_7^{-25}

Groups giving the symmetric space $\mathrm{Sp}(2n, \mathbb{R})/\mathrm{U}(n)$:

Groups giving the symmetric space $\mathrm{Sp}(2n, \mathbb{R})/\mathrm{U}(n)$:

$$\mathrm{Sp}(2n, \mathbb{R})$$

Groups giving the symmetric space $\mathrm{Sp}(2n, \mathbb{R})/\mathrm{U}(n)$:

$$\mathrm{Sp}(2n, \mathbb{R})$$

$$\mathrm{Sp}(2n, \mathbb{R})/\{\pm 1\}$$

Groups giving the symmetric space $\mathrm{Sp}(2n, \mathbb{R})/\mathrm{U}(n)$:

$$\mathrm{Mp}(2n, \mathbb{R})$$

$$\mathrm{Sp}(2n, \mathbb{R})$$

$$\mathrm{Sp}(2n, \mathbb{R})/\{\pm 1\}$$

Groups giving the symmetric space $\mathrm{Sp}(2n,\mathbb{R})/\mathrm{U}(n)$:

$$\widetilde{\mathrm{Sp}(2n,\mathbb{R})}$$

$$\mathrm{Mp}(2n,\mathbb{R})$$

$$\mathrm{Sp}(2n,\mathbb{R})$$

$$\mathrm{Sp}(2n,\mathbb{R})/\{\pm 1\}$$

Groups giving the symmetric space $\mathrm{Sp}(2n,\mathbb{R})/\mathrm{U}(n)$:

$$\widetilde{\mathrm{Sp}(2n,\mathbb{R})}$$

$$\cdots$$

$$\cdots$$

$$\mathrm{Mp}(2n,\mathbb{R})$$

$$\mathrm{Sp}(2n,\mathbb{R})$$

$$\mathrm{Sp}(2n,\mathbb{R})/\{\pm 1\}$$

Groups giving the symmetric space $\mathrm{Sp}(2n,\mathbb{R})/\mathrm{U}(n)$:

$$\widetilde{\mathrm{Sp}(2n,\mathbb{R})}$$

$$\cdots$$

- - - - - - - - - - - - - - - - - - - -

$$\cdots$$

$$\mathrm{Mp}(2n,\mathbb{R})$$

$$\mathrm{Sp}(2n,\mathbb{R})$$

$$\mathrm{Sp}(2n,\mathbb{R})/\{\pm 1\}$$

Groups giving the symmetric space $\mathrm{Sp}(2n,\mathbb{R})/\mathrm{U}(n)$:

$$\widetilde{\mathrm{Sp}(2n,\mathbb{R})}$$

$$\cdots$$

- - - - - - - - - - - - - - - - - - - -

$$\left.\begin{array}{c}\cdots\\ \mathrm{Mp}(2n,\mathbb{R})\\ \mathrm{Sp}(2n,\mathbb{R})\\ \mathrm{Sp}(2n,\mathbb{R})/\{\pm 1\}\end{array}\right\}$$

Groups giving the symmetric space $\mathrm{Sp}(2n,\mathbb{R})/\mathrm{U}(n)$:

$$\widetilde{\mathrm{Sp}(2n,\mathbb{R})}$$

$$\cdots$$

- - - - - - - - - - - - - - - - - - - -

$$\left.\begin{array}{c}\cdots\\ \mathrm{Mp}(2n,\mathbb{R})\\ \mathrm{Sp}(2n,\mathbb{R})\\ \mathrm{Sp}(2n,\mathbb{R})/\{\pm 1\}\end{array}\right\}\quad \text{finite coverings}$$

Groups giving the symmetric space $\mathrm{Sp}(2n,\mathbb{R})/\mathrm{U}(n)$:

$$\widetilde{\mathrm{Sp}(2n,\mathbb{R})}$$

$$\cdots$$

- - - - - - - - - - - - - - - - - - - -

$$\left.\begin{array}{c}\cdots\\ \mathrm{Mp}(2n,\mathbb{R})\\ \mathrm{Sp}(2n,\mathbb{R})\\ \mathrm{Sp}(2n,\mathbb{R})/\{\pm 1\}\end{array}\right\}$$

finite coverings

G/H Hermitian with H compact

$$\mathfrak{g} = \mathfrak{h} + \mathfrak{m}$$

G/H cplx

$$\mathfrak{g} = \mathfrak{h} + \mathfrak{m}$$

$$G/H \text{ cplx} \Rightarrow (\mathfrak{m} = T_e{}^G/_H, J) \text{ cplx}$$

$$\mathfrak{g} = \mathfrak{h} + \mathfrak{m}$$

$$G/H \text{ cplx} \Rightarrow (\mathfrak{m} = T_e{}^G/_H, J) \text{ cplx}$$

$$\mathfrak{m}^{\mathbb{C}} = \mathfrak{m}^+ + \mathfrak{m}^-$$

$$\mathfrak{g} = \mathfrak{h} + \mathfrak{m}$$

$$G/H \text{ cplx} \Rightarrow (\mathfrak{m} = T_e{}^G/_H, J) \text{ cplx}$$

$$\mathfrak{m}^{\mathbb{C}} = \mathfrak{m}^+ + \mathfrak{m}^-$$

E, principal $H^{\mathbb{C}}$-bundle

$\varphi \in H^0(E(\mathfrak{m}^{\mathbb{C}}) \otimes K)$

$$\mathfrak{g} = \mathfrak{h} + \mathfrak{m}$$

$$G/H \text{ cplx} \Rightarrow (\mathfrak{m} = T_e{}^G/_H, J) \text{ cplx}$$

$$\mathfrak{m}^{\mathbb{C}} = \mathfrak{m}^{+} + \mathfrak{m}^{-}$$

E, principal $H^{\mathbb{C}}$-bundle

$\varphi \in H^0(E(\mathfrak{m}^{\mathbb{C}}) \otimes K)$

$$\varphi = (\beta, \gamma)$$

$$\mathfrak{g} = \mathfrak{h} + \mathfrak{m}$$

$$G/H \text{ cplx} \Rightarrow (\mathfrak{m} = T_e{}^G/_H, J) \text{ cplx}$$

$$\mathfrak{m}^{\mathbb{C}} = \mathfrak{m}^+ + \mathfrak{m}^-$$

$$E, \text{ principal } H^{\mathbb{C}}\text{-bundle}$$

$$\varphi \in H^0(E(\mathfrak{m}^{\mathbb{C}}) \otimes K)$$

$$\varphi = (\beta, \gamma)$$

$$\in H^0(E(\mathfrak{m}^+) \otimes K) \oplus H^0(E(\mathfrak{m}^+) \otimes K)$$

$$\mathfrak{g} = \mathfrak{h} + \mathfrak{m}$$

$$\mathfrak{g} = \mathfrak{h} + \mathfrak{m}$$

root α

$$\mathfrak{g} = \mathfrak{h} + \mathfrak{m}$$

root α $\quad \mathfrak{g}_\alpha^{\mathbb{C}} \subset \mathfrak{h}^{\mathbb{C}}$

$$\mathfrak{g} = \mathfrak{h} + \mathfrak{m}$$

root α $\quad \mathfrak{g}_\alpha^{\mathbb{C}} \subset \mathfrak{h}^{\mathbb{C}} \qquad \mathfrak{g}_\alpha^{\mathbb{C}} \subset \mathfrak{m}^{\mathbb{C}}$

$$\mathfrak{g} = \mathfrak{h} + \mathfrak{m}$$

root α	$\mathfrak{g}_\alpha^{\mathbb{C}} \subset \mathfrak{h}^{\mathbb{C}}$ compact	$\mathfrak{g}_\alpha^{\mathbb{C}} \subset \mathfrak{m}^{\mathbb{C}}$

$$\mathfrak{g} = \mathfrak{h} + \mathfrak{m}$$

root α	$\mathfrak{g}_\alpha^{\mathbb{C}} \subset \mathfrak{h}^{\mathbb{C}}$	$\mathfrak{g}_\alpha^{\mathbb{C}} \subset \mathfrak{m}^{\mathbb{C}}$
	compact	non-compact

$$\mathfrak{g} = \mathfrak{h} + \mathfrak{m}$$

root α	$\mathfrak{g}_\alpha^{\mathbb{C}} \subset \mathfrak{h}^{\mathbb{C}}$	$\mathfrak{g}_\alpha^{\mathbb{C}} \subset \mathfrak{m}^{\mathbb{C}}$
	compact	non-compact

$$\Delta(\mathfrak{g}^{\mathbb{C}}) =$$

$$\mathfrak{g} = \mathfrak{h} + \mathfrak{m}$$

root α	$\mathfrak{g}_\alpha^{\mathbb{C}} \subset \mathfrak{h}^{\mathbb{C}}$ compact	$\mathfrak{g}_\alpha^{\mathbb{C}} \subset \mathfrak{m}^{\mathbb{C}}$ non-compact
$\Delta(\mathfrak{g}^{\mathbb{C}}) =$	Δ_C	

$$\mathfrak{g} = \mathfrak{h} + \mathfrak{m}$$

root α	$\mathfrak{g}_\alpha^{\mathbb{C}} \subset \mathfrak{h}^{\mathbb{C}}$ compact		$\mathfrak{g}_\alpha^{\mathbb{C}} \subset \mathfrak{m}^{\mathbb{C}}$ non-compact
$\Delta(\mathfrak{g}^{\mathbb{C}}) =$	Δ_C	$\cup$	Δ_Q

$$\mathfrak{g} = \mathfrak{h} + \mathfrak{m}$$

root α	$\mathfrak{g}_\alpha^{\mathbb{C}} \subset \mathfrak{h}^{\mathbb{C}}$ compact	$\mathfrak{g}_\alpha^{\mathbb{C}} \subset \mathfrak{m}^{\mathbb{C}}$ non-compact

$$\Delta(\mathfrak{g}^{\mathbb{C}}) = \quad \Delta_C \quad \cup \quad \Delta_Q$$

$\Gamma \subset \Delta_Q$ system of positive strongly orthogonal roots

$$\mathfrak{g} = \mathfrak{h} + \mathfrak{m}$$

root α	$\mathfrak{g}_\alpha^{\mathbb{C}} \subset \mathfrak{h}^{\mathbb{C}}$ compact	$\mathfrak{g}_\alpha^{\mathbb{C}} \subset \mathfrak{m}^{\mathbb{C}}$ non-compact

$$\Delta(\mathfrak{g}^{\mathbb{C}}) = \quad \Delta_C \quad \cup \quad \Delta_Q$$

$\Gamma \subset \Delta_Q$ system of positive strongly orthogonal roots determines

$$\mathfrak{g} = \mathfrak{h} + \mathfrak{m}$$

root α	$\mathfrak{g}_\alpha^{\mathbb{C}} \subset \mathfrak{h}^{\mathbb{C}}$ compact	$\mathfrak{g}_\alpha^{\mathbb{C}} \subset \mathfrak{m}^{\mathbb{C}}$ non-compact

$$\Delta(\mathfrak{g}^{\mathbb{C}}) = \Delta_C \cup \Delta_Q$$

$\Gamma \subset \Delta_Q$ system of positive strongly orthogonal roots determines

$$e_\Gamma \in \mathfrak{m}^+$$

$$\mathfrak{g} = \mathfrak{h} + \mathfrak{m}$$

root α	$\mathfrak{g}_\alpha^{\mathbb{C}} \subset \mathfrak{h}^{\mathbb{C}}$ compact	$\mathfrak{g}_\alpha^{\mathbb{C}} \subset \mathfrak{m}^{\mathbb{C}}$ non-compact

$$\Delta(\mathfrak{g}^{\mathbb{C}}) = \quad \Delta_C \quad \cup \quad \Delta_Q$$

$\Gamma \subset \Delta_Q$ system of positive strongly orthogonal roots determines

$$e_\Gamma \in \mathfrak{m}^+$$

$$\mathrm{Ad}(c) \in \mathrm{Aut}(\mathfrak{g}^{\mathbb{C}})$$

Cayley transform

$$\mathfrak{g} = \mathfrak{h} + \mathfrak{m}$$

root α	$\mathfrak{g}_\alpha^{\mathbb{C}} \subset \mathfrak{h}^{\mathbb{C}}$ compact	$\mathfrak{g}_\alpha^{\mathbb{C}} \subset \mathfrak{m}^{\mathbb{C}}$ non-compact

$$\Delta(\mathfrak{g}^{\mathbb{C}}) = \Delta_C \cup \Delta_Q$$

$\Gamma \subset \Delta_Q$ system of positive strongly orthogonal roots determines

$$e_\Gamma \in \mathfrak{m}^+$$

$$\mathrm{Ad}(c) \in \mathrm{Aut}(\mathfrak{g}^{\mathbb{C}})$$

Cayley transform

c

acting via the Harish-Chandra embedding in $\mathfrak{m}^+$

c

acting via the Harish-Chandra embedding in $\mathfrak{m}^+$

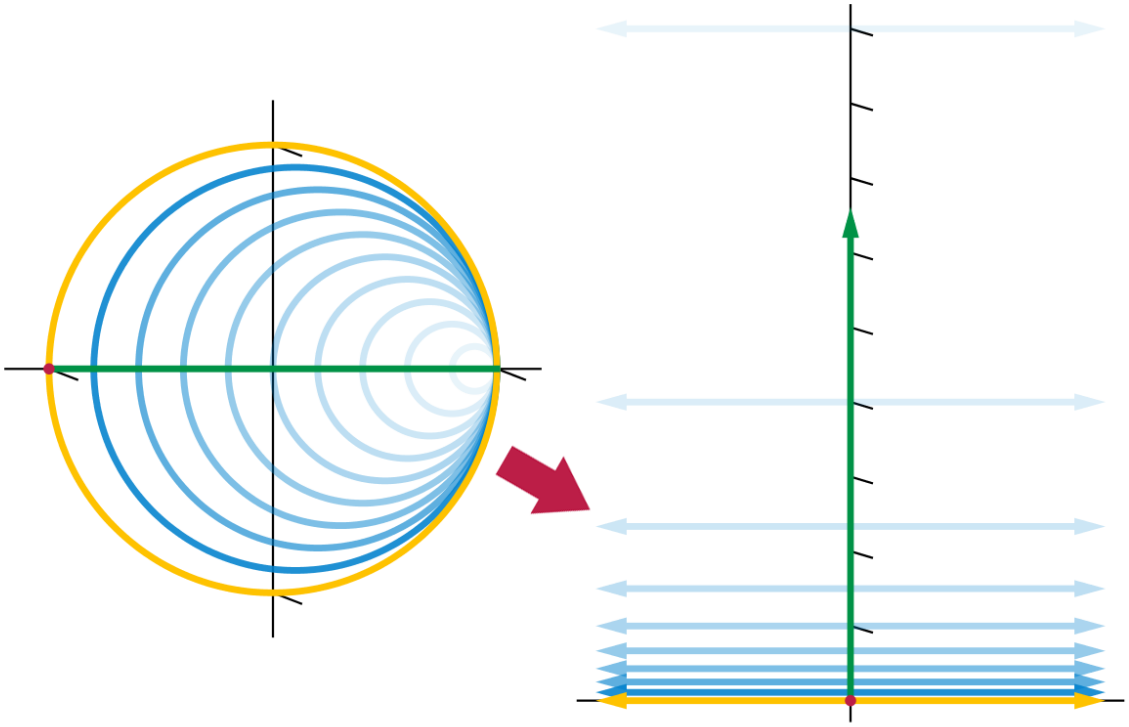

c

acting via the Harish-Chandra embedding in $\mathfrak{m}^+$

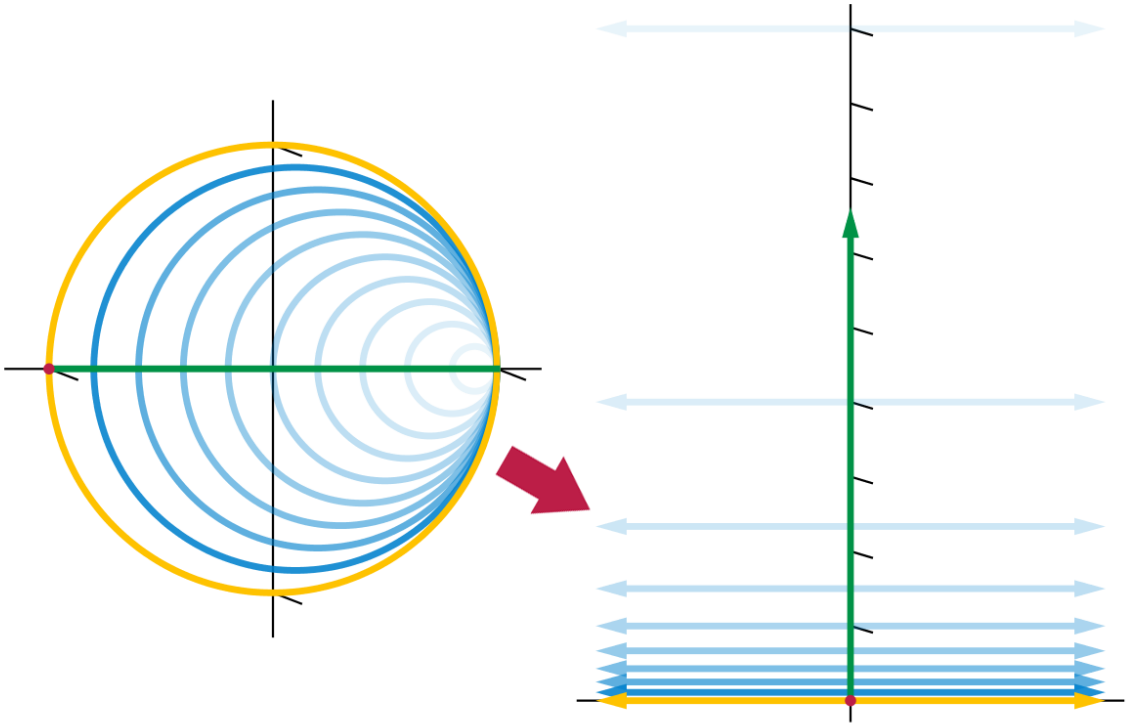

gives the Cayley transform

c

acting via the Harish-Chandra embedding in $\mathfrak{m}^+$

Realization of Hermitian Symmetric Spaces as Generalized Half-planes

By ADAM KORÁNYI* and JOSEPH A. WOLF**

gives the Cayley transform

$$\mathrm{Ad}(c) \in \mathrm{Aut}(\mathfrak{g}^{\mathbb{C}})$$

$$\mathrm{Ad}(c) \in \mathrm{Aut}(\mathfrak{g}^{\mathbb{C}})$$

$$\mathrm{Ad}(c)^8 = \mathrm{Id}$$

$$\mathrm{Ad}(c) \in \mathrm{Aut}(\mathfrak{g}^{\mathbb{C}})$$

$$\mathrm{Ad}(c)^8 = \mathrm{Id} = \mathrm{Ad}(c^4)^2$$

$$\mathrm{Ad}(c) \in \mathrm{Aut}(\mathfrak{g}^{\mathbb{C}})$$

$$\mathrm{Ad}(c)^8 = \mathrm{Id} = \mathrm{Ad}(c^4)^2 \text{ gives } \mathfrak{g} = \mathfrak{g}_T + \mathfrak{g}_2$$

$$\mathrm{Ad}(c) \in \mathrm{Aut}(\mathfrak{g}^{\mathbb{C}})$$

$$\mathrm{Ad}(c)^8 = \mathrm{Id} = \mathrm{Ad}(c^4)^2 \text{ gives } \mathfrak{g} = \mathfrak{g}_T + \mathfrak{g}_2$$

$$\mathfrak{h} = \widetilde{\mathfrak{h}}_T + \mathfrak{h}_2$$

$$\mathrm{Ad}(c) \in \mathrm{Aut}(\mathfrak{g}^{\mathbb{C}})$$

$$\mathrm{Ad}(c)^8 = \mathrm{Id} = \mathrm{Ad}(c^4)^2 \text{ gives } \mathfrak{g} = \mathfrak{g}_T + \mathfrak{g}_2$$

$$\mathfrak{h} = \widetilde{\mathfrak{h}}_T + \mathfrak{h}_2$$

$$\mathfrak{m} = \mathfrak{m}_T + \mathfrak{m}_2$$

$$\mathrm{Ad}(c) \in \mathrm{Aut}(\mathfrak{g}^{\mathbb{C}})$$

$$\mathrm{Ad}(c)^8 = \mathrm{Id} = \mathrm{Ad}(c^4)^2 \text{ gives } \mathfrak{g} = \mathfrak{g}_T + \mathfrak{g}_2$$

$$\mathfrak{h} = \widetilde{\mathfrak{h}}_T + \mathfrak{h}_2$$

$$\mathfrak{m} = \mathfrak{m}_T + \mathfrak{m}_2$$

$$\mathfrak{h}_T = [\mathfrak{m}_T, \mathfrak{m}_T]$$

$$\mathrm{Ad}(c) \in \mathrm{Aut}(\mathfrak{g}^{\mathbb{C}})$$

$$\mathrm{Ad}(c)^8 = \mathrm{Id} = \mathrm{Ad}(c^4)^2 \text{ gives } \mathfrak{g} = \mathfrak{g}_T + \mathfrak{g}_2$$

$$\mathfrak{h} = \widetilde{\mathfrak{h}}_T + \mathfrak{h}_2$$

$$\mathfrak{m} = \mathfrak{m}_T + \mathfrak{m}_2$$

$$\mathfrak{h}_T = [\mathfrak{m}_T, \mathfrak{m}_T]$$

$$\widetilde{\mathfrak{h}}_T = \mathfrak{n}_{\mathfrak{h}^{\mathbb{C}}}(\mathfrak{h}_T^{\mathbb{C}})$$

$$\mathrm{Ad}(c) \in \mathrm{Aut}(\mathfrak{g}^{\mathbb{C}})$$

$$\mathrm{Ad}(c) \in \mathrm{Aut}(\mathfrak{g}^{\mathbb{C}})$$

$$\mathrm{Ad}(c)^8 = \mathrm{Id}$$

$$\mathrm{Ad}(c) \in \mathrm{Aut}(\mathfrak{g}^{\mathbb{C}})$$

$$\mathrm{Ad}(c)^8 = \mathrm{Id} = \mathrm{Ad}(c^4)^2$$

$$\mathrm{Ad}(c) \in \mathrm{Aut}(\mathfrak{g}^{\mathbb{C}})$$

$$\mathrm{Ad}(c)^8 = \mathrm{Id} = \mathrm{Ad}(c^4)^2 \text{ gives } \mathfrak{g} = \mathfrak{g}_T + \mathfrak{g}_2$$

$$\mathrm{Ad}(c) \in \mathrm{Aut}(\mathfrak{g}^{\mathbb{C}})$$

$$\mathrm{Ad}(c)^8 = \mathrm{Id} = \mathrm{Ad}(c^4)^2 \text{ gives } \mathfrak{g} = \mathfrak{g}_T + \mathfrak{g}_2$$

If $\mathrm{Ad}(c)^4 = \mathrm{Id}$,

$$\mathrm{Ad}(c) \in \mathrm{Aut}(\mathfrak{g}^{\mathbb{C}})$$

$$\mathrm{Ad}(c)^8 = \mathrm{Id} = \mathrm{Ad}(c^4)^2 \text{ gives } \mathfrak{g} = \mathfrak{g}_T + \mathfrak{g}_2$$

If $\mathrm{Ad}(c)^4 = \mathrm{Id}$, the half-plane is a tube domain!

$$\mathrm{Ad}(c) \in \mathrm{Aut}(\mathfrak{g}^{\mathbb{C}})$$

$$\mathrm{Ad}(c)^8 = \mathrm{Id} = \mathrm{Ad}(c^4)^2 \text{ gives } \mathfrak{g} = \mathfrak{g}_T + \mathfrak{g}_2$$

If $\mathrm{Ad}(c)^4 = \mathrm{Id}$, the half-plane is a tube domain!
($T_\Omega = V + i\Omega \subset V^{\mathbb{C}}$ for Ω a cone)

$$\mathrm{Ad}(c) \in \mathrm{Aut}(\mathfrak{g}^{\mathbb{C}})$$

$$\mathrm{Ad}(c)^8 = \mathrm{Id} = \mathrm{Ad}(c^4)^2 \text{ gives } \mathfrak{g} = \mathfrak{g}_T + \mathfrak{g}_2$$

If $\mathrm{Ad}(c)^4 = \mathrm{Id}$, the half-plane is a tube domain!
($T_\Omega = V + i\Omega \subset V^{\mathbb{C}}$ for Ω a cone)

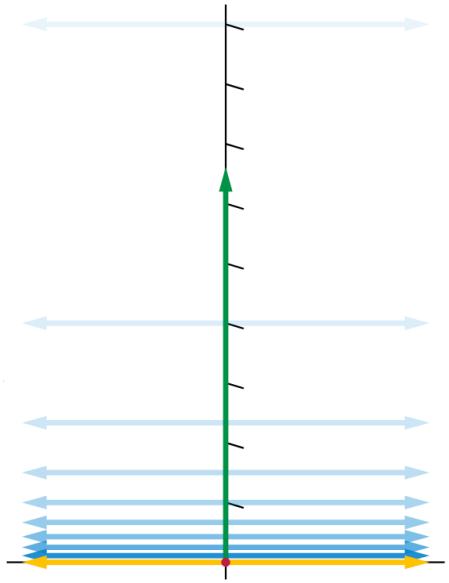

How many groups of Hermitian type?
Using Cartan's classification, there are four classical families:

- $\mathrm{SU}(p, q)$
- $\mathrm{Sp}(2n, \mathbb{R})$
- $\mathrm{SO}_0(2, n)$
- $\mathrm{SO}^*(2n)$

And two exceptional cases:

- E_6^{-14}
- E_7^{-25}

How many groups of Hermitian type?
Using Cartan's classification, there are four classical families:

- $\mathrm{SU}(p, q)$ (tube when $p = q$)
- $\mathrm{Sp}(2n, \mathbb{R})$
- $\mathrm{SO}_0(2, n)$
- $\mathrm{SO}^*(2n)$

And two exceptional cases:

- E_6^{-14}
- E_7^{-25}

How many groups of Hermitian type?
Using Cartan's classification, there are four classical families:

- $\mathrm{SU}(p, q)$ (tube when $p = q$)
- $\mathrm{Sp}(2n, \mathbb{R})$ (tube)
- $\mathrm{SO}_0(2, n)$
- $\mathrm{SO}^*(2n)$

And two exceptional cases:

- E_6^{-14}
- E_7^{-25}

How many groups of Hermitian type?
Using Cartan's classification, there are four classical families:

- $\mathrm{SU}(p, q)$ (tube when $p = q$)
- $\mathrm{Sp}(2n, \mathbb{R})$ (tube)
- $\mathrm{SO}_0(2, n)$ (tube)
- $\mathrm{SO}^*(2n)$

And two exceptional cases:

- E_6^{-14}
- E_7^{-25}

How many groups of Hermitian type?
Using Cartan's classification, there are four classical families:

- $\mathrm{SU}(p, q)$ (tube when $p = q$)
- $\mathrm{Sp}(2n, \mathbb{R})$ (tube)
- $\mathrm{SO}_0(2, n)$ (tube)
- $\mathrm{SO}^*(2n)$ (tube for n even)

And two exceptional cases:

- E_6^{-14}
- E_7^{-25}

How many groups of Hermitian type?
Using Cartan's classification, there are four classical families:

- $\mathrm{SU}(p, q)$ (tube when $p = q$)
- $\mathrm{Sp}(2n, \mathbb{R})$ (tube)
- $\mathrm{SO}_0(2, n)$ (tube)
- $\mathrm{SO}^*(2n)$ (tube for n even)

And two exceptional cases:

- E_6^{-14} (non-tube)
- E_7^{-25}

How many groups of Hermitian type?
Using Cartan's classification, there are four classical families:

- $\mathrm{SU}(p, q)$ (tube when $p = q$)
- $\mathrm{Sp}(2n, \mathbb{R})$ (tube)
- $\mathrm{SO}_0(2, n)$ (tube)
- $\mathrm{SO}^*(2n)$ (tube for n even)

And two exceptional cases:

- E_6^{-14} (non-tube)
- E_7^{-25} (tube)

Tube-type case

Tube-type case

$\mathrm{Ad}(c)^4 = Id$

Tube-type case

$$\mathrm{Ad}(c)^4 = Id = \mathrm{Ad}(c^2)^2$$

Tube-type case

$\mathrm{Ad}(c)^4 = Id = \mathrm{Ad}(c^2)^2$ gives $\mathfrak{h} = \mathfrak{h}' + i\mathfrak{m}'$.

Tube-type case

$\mathrm{Ad}(c)^4 = Id = \mathrm{Ad}(c^2)^2$ gives $\mathfrak{h} = \mathfrak{h}' + i\mathfrak{m}'$.

Non-compact dual:

Tube-type case

$\mathrm{Ad}(c)^4 = Id = \mathrm{Ad}(c^2)^2$ gives $\mathfrak{h} = \mathfrak{h}' + i\mathfrak{m}'$.

Non-compact dual: $\mathfrak{h}^* = \mathfrak{h}' + \mathfrak{m}'$.

Tube-type case

$\mathrm{Ad}(c)^4 = Id = \mathrm{Ad}(c^2)^2$ gives $\mathfrak{h} = \mathfrak{h}' + i\mathfrak{m}'$.

Non-compact dual: $\mathfrak{h}^* = \mathfrak{h}' + \mathfrak{m}'$.

$H^* \subset H^{\mathbb{C}}$,

Tube-type case

$\mathrm{Ad}(c)^4 = Id = \mathrm{Ad}(c^2)^2$ gives $\mathfrak{h} = \mathfrak{h}' + i\mathfrak{m}'$.

Non-compact dual: $\mathfrak{h}^* = \mathfrak{h}' + \mathfrak{m}'$.

$H^* \subset H^{\mathbb{C}}$, $H' = Stab(e_\Gamma)$,

Tube-type case

$\mathrm{Ad}(c)^4 = Id = \mathrm{Ad}(c^2)^2$ gives $\mathfrak{h} = \mathfrak{h}' + i\mathfrak{m}'$.

Non-compact dual: $\mathfrak{h}^* = \mathfrak{h}' + \mathfrak{m}'$.

$H^* \subset H^{\mathbb{C}}$, $H' = Stab(e_\Gamma)$, $\mathfrak{h}' = Ann(e_\Gamma)$.

Tube-type case

$$\mathrm{Ad}(c)^4 = Id = \mathrm{Ad}(c^2)^2 \text{ gives } \mathfrak{h} = \mathfrak{h}' + i\mathfrak{m}'.$$

Non-compact dual: $\mathfrak{h}^* = \mathfrak{h}' + \mathfrak{m}'$.

$$H^* \subset H^{\mathbb{C}},\ H' = Stab(e_\Gamma),\ \mathfrak{h}' = Ann(e_\Gamma).$$

The cone is $\Omega \cong H^*/H'_0$,

Tube-type case

$\mathrm{Ad}(c)^4 = Id = \mathrm{Ad}(c^2)^2$ gives $\mathfrak{h} = \mathfrak{h}' + i\mathfrak{m}'$.

Non-compact dual: $\mathfrak{h}^* = \mathfrak{h}' + \mathfrak{m}'$.

$H^* \subset H^{\mathbb{C}}$, $H' = Stab(e_\Gamma)$, $\mathfrak{h}' = Ann(e_\Gamma)$.

The cone is $\Omega \cong H^*/H'_0$, dual of $\check{S} = H/H'$.

Tube-type case

$\mathrm{Ad}(c)^4 = Id = \mathrm{Ad}(c^2)^2$ gives $\mathfrak{h} = \mathfrak{h}' + i\mathfrak{m}'$.

Non-compact dual: $\mathfrak{h}^* = \mathfrak{h}' + \mathfrak{m}'$.

$H^* \subset H^{\mathbb{C}}$, $H' = Stab(e_\Gamma)$, $\mathfrak{h}' = Ann(e_\Gamma)$.

The cone is $\Omega \cong H^*/H'_0$, dual of $\check{S} = H/H'$.

$\mathrm{ad}(e_\Gamma)$ defines $\mathfrak{m}'^{\mathbb{C}} \cong \mathfrak{m}^+$,

Tube-type case

$\mathrm{Ad}(c)^4 = Id = \mathrm{Ad}(c^2)^2$ gives $\mathfrak{h} = \mathfrak{h}' + i\mathfrak{m}'$.

Non-compact dual: $\mathfrak{h}^* = \mathfrak{h}' + \mathfrak{m}'$.

$H^* \subset H^{\mathbb{C}}$, $H' = Stab(e_\Gamma)$, $\mathfrak{h}' = Ann(e_\Gamma)$.

The cone is $\Omega \cong H^*/H'_0$, dual of $\check{S} = H/H'$.

$\mathrm{ad}(e_\Gamma)$ defines $\mathfrak{m}'^{\mathbb{C}} \cong \mathfrak{m}^+$, $\mathrm{Ad}(H'_0)$ -equivariant.

Tube-type case

$\mathrm{Ad}(c)^4 = Id = \mathrm{Ad}(c^2)^2$ gives $\mathfrak{h} = \mathfrak{h}' + i\mathfrak{m}'$.

Non-compact dual: $\mathfrak{h}^* = \mathfrak{h}' + \mathfrak{m}'$.

$H^* \subset H^{\mathbb{C}}$, $H' = Stab(e_\Gamma)$, $\mathfrak{h}' = Ann(e_\Gamma)$.

The cone is $\Omega \cong H^*/H'_0$, dual of $\check{S} = H/H'$.

$\mathrm{ad}(e_\Gamma)$ defines $\mathfrak{m}'^{\mathbb{C}} \cong \mathfrak{m}^+$, $\mathrm{Ad}(H'^{\mathbb{C}})$-equivariant.

Tube-type case

$\mathrm{Ad}(c)^4 = Id = \mathrm{Ad}(c^2)^2$ gives $\mathfrak{h} = \mathfrak{h}' + i\mathfrak{m}'$.

Non-compact dual: $\mathfrak{h}^* = \mathfrak{h}' + \mathfrak{m}'$.

$H^* \subset H^{\mathbb{C}}$, $H' = Stab(e_\Gamma)$, $\mathfrak{h}' = Ann(e_\Gamma)$.

The cone is $\Omega \cong H^*/H'_0$, dual of $\check{S} = H/H'$.

$\mathrm{ad}(e_\Gamma)$ defines $\mathfrak{m}'^{\mathbb{C}} \cong \mathfrak{m}^+$, $\mathrm{Ad}(H'^{\mathbb{C}})$-equivariant.

Moreover, $\mathfrak{m}^+$ is a Jordan algebra (triple)

Tube-type case

$\mathrm{Ad}(c)^4 = Id = \mathrm{Ad}(c^2)^2$ gives $\mathfrak{h} = \mathfrak{h}' + i\mathfrak{m}'$.

Non-compact dual: $\mathfrak{h}^* = \mathfrak{h}' + \mathfrak{m}'$.

$H^* \subset H^{\mathbb{C}}$, $H' = Stab(e_\Gamma)$, $\mathfrak{h}' = Ann(e_\Gamma)$.

The cone is $\Omega \cong H^*/H'_0$, dual of $\check{S} = H/H'$.

$\mathrm{ad}(e_\Gamma)$ defines $\mathfrak{m}'^{\mathbb{C}} \cong \mathfrak{m}^+$, $\mathrm{Ad}(H'^{\mathbb{C}})$-equivariant.

Moreover, $\mathfrak{m}^+$ is a Jordan algebra (triple) $\Rightarrow$ $\begin{array}{c} \det : \mathfrak{m}^+ \to \mathbb{C} \\ \mathrm{rank\ on}\ \mathfrak{m}^+ \end{array}$

Tube-type case

$\mathrm{Ad}(c)^4 = Id = \mathrm{Ad}(c^2)^2$ gives $\mathfrak{h} = \mathfrak{h}' + i\mathfrak{m}'$.

Non-compact dual: $\mathfrak{h}^* = \mathfrak{h}' + \mathfrak{m}'$.

$H^* \subset H^{\mathbb{C}}$, $H' = Stab(e_\Gamma)$, $\mathfrak{h}' = Ann(e_\Gamma)$.

The cone is $\Omega \cong H^*/H'_0$, dual of $\check{S} = H/H'$.

$\mathrm{ad}(e_\Gamma)$ defines $\mathfrak{m}'^{\mathbb{C}} \cong \mathfrak{m}^+$, $\mathrm{Ad}(H'^{\mathbb{C}})$-equivariant.

Moreover, $\mathfrak{m}^+$ is a Jordan algebra (triple) $\Rightarrow$ $\begin{array}{c} \det : \mathfrak{m}^+ \to \mathbb{C} \\ \mathrm{rank\ on\ } \mathfrak{m}^+ \end{array}$

$\det(e_\Gamma) = 1$,

Tube-type case

$\mathrm{Ad}(c)^4 = Id = \mathrm{Ad}(c^2)^2$ gives $\mathfrak{h} = \mathfrak{h}' + i\mathfrak{m}'$.

Non-compact dual: $\mathfrak{h}^* = \mathfrak{h}' + \mathfrak{m}'$.

$H^* \subset H^{\mathbb{C}}$, $H' = Stab(e_\Gamma)$, $\mathfrak{h}' = Ann(e_\Gamma)$.

The cone is $\Omega \cong H^*/H'_0$, dual of $\check{S} = H/H'$.

$\mathrm{ad}(e_\Gamma)$ defines $\mathfrak{m}'^{\mathbb{C}} \cong \mathfrak{m}^+$, $\mathrm{Ad}(H'^{\mathbb{C}})$-equivariant.

Moreover, $\mathfrak{m}^+$ is a Jordan algebra (triple) $\Rightarrow$ $\det : \mathfrak{m}^+ \to \mathbb{C}$, rank on $\mathfrak{m}^+$

$\det(e_\Gamma) = 1$, $\mathfrak{m}^+_{D\neq 0} \cong H^{\mathbb{C}}/H'^{\mathbb{C}}$

Tube-type case

$\mathrm{Ad}(c)^4 = Id = \mathrm{Ad}(c^2)^2$ gives $\mathfrak{h} = \mathfrak{h}' + i\mathfrak{m}'$.

Non-compact dual: $\mathfrak{h}^* = \mathfrak{h}' + \mathfrak{m}'$.

$H^* \subset H^{\mathbb{C}}$, $H' = Stab(e_\Gamma)$, $\mathfrak{h}' = Ann(e_\Gamma)$.

The cone is $\Omega \cong H^*/H'_0$, dual of $\check{S} = H/H'$.

$\mathrm{ad}(e_\Gamma)$ defines $\mathfrak{m}'^{\mathbb{C}} \cong \mathfrak{m}^+$, $\mathrm{Ad}(H'^{\mathbb{C}})$-equivariant.

Moreover, $\mathfrak{m}^+$ is a Jordan algebra (triple) $\Rightarrow$ $\det : \mathfrak{m}^+ \to \mathbb{C}$, rank on $\mathfrak{m}^+$

$\det(e_\Gamma) = 1$, $\mathfrak{m}^+_{D\neq 0} \cong H^{\mathbb{C}}/H'^{\mathbb{C}}$

Tube-type case

$\mathrm{Ad}(c)^4 = Id = \mathrm{Ad}(c^2)^2$ gives $\mathfrak{h} = \mathfrak{h}' + i\mathfrak{m}'$.

Non-compact dual: $\mathfrak{h}^* = \mathfrak{h}' + \mathfrak{m}'$.

$H^* \subset H^{\mathbb{C}}$, $H' = Stab(e_\Gamma)$, $\mathfrak{h}' = Ann(e_\Gamma)$.

The cone is $\Omega \cong H^*/H'_0$, dual of $\check{S} = H/H'$.

$\mathrm{ad}(e_\Gamma)$ defines $\mathfrak{m}'^{\mathbb{C}} \cong \mathfrak{m}^+$, $\mathrm{Ad}(H'^{\mathbb{C}})$-equivariant.

Moreover, $\mathfrak{m}^+$ is a Jordan algebra (triple) $\Rightarrow$ $\det : \mathfrak{m}^+ \to \mathbb{C}$, rank on $\mathfrak{m}^+$

$\det(e_\Gamma) = 1$, $\mathfrak{m}^+_{D\neq 0} \cong H^{\mathbb{C}}/H'^{\mathbb{C}}$

Tube-type case

$\mathrm{Ad}(c)^4 = Id = \mathrm{Ad}(c^2)^2$ gives $\mathfrak{h} = \mathfrak{h}' + i\mathfrak{m}'$.

Non-compact dual: $\mathfrak{h}^* = \mathfrak{h}' + \mathfrak{m}'$.

$H^* \subset H^{\mathbb{C}}$, $H' = Stab(e_\Gamma)$, $\mathfrak{h}' = Ann(e_\Gamma)$.

The cone is $\Omega \cong H^*/H'_0$, dual of $\check{S} = H/H'$.

$\mathrm{ad}(e_\Gamma)$ defines $\mathfrak{m}'^{\mathbb{C}} \cong \mathfrak{m}^+$, $\mathrm{Ad}(H'^{\mathbb{C}})$-equivariant.

Moreover, $\mathfrak{m}^+$ is a Jordan algebra (triple) $\Rightarrow$ $\det : \mathfrak{m}^+ \to \mathbb{C}$, rank on $\mathfrak{m}^+$

$\det(e_\Gamma) = 1$, $\mathfrak{m}^+_{D\neq 0} \cong H^{\mathbb{C}}/H'^{\mathbb{C}}$

Tube-type case

$\mathrm{Ad}(c)^4 = Id = \mathrm{Ad}(c^2)^2$ gives $\mathfrak{h} = \mathfrak{h}' + i\mathfrak{m}'$.

Non-compact dual: $\mathfrak{h}^* = \mathfrak{h}' + \mathfrak{m}'$.

$H^* \subset H^{\mathbb{C}}$, $H' = Stab(e_\Gamma)$, $\mathfrak{h}' = Ann(e_\Gamma)$.

The cone is $\Omega \cong H^*/H'_0$, dual of $\check{S} = H/H'$.

$\mathrm{ad}(e_\Gamma)$ defines $\mathfrak{m}'^{\mathbb{C}} \cong \mathfrak{m}^+$, $\mathrm{Ad}(H'^{\mathbb{C}})$-equivariant.

Moreover, $\mathfrak{m}^+$ is a Jordan algebra (triple) $\Rightarrow$ $\det : \mathfrak{m}^+ \to \mathbb{C}$, rank on $\mathfrak{m}^+$

$\det(e_\Gamma) = 1$, $\mathfrak{m}^+_{D\neq 0} \cong H^{\mathbb{C}}/H'^{\mathbb{C}}$

Definition

$$\chi_T = \frac{2}{N} \sum_{\alpha \in \Delta_Q^+} \alpha$$

Definition

$$\chi_T = \frac{2}{N} \sum_{\alpha \in \Delta_Q^+} \alpha$$

(N dual Coxeter number,

Definition

$$\chi_T = \frac{2}{N} \sum_{\alpha \in \Delta_Q^+} \alpha$$

(N dual Coxeter number, genus of the Jordan triple)

Definition

$$\chi_T = \frac{2}{N} \sum_{\alpha \in \Delta_Q^+} \alpha$$

(N dual Coxeter number, genus of the Jordan triple)

defines a character on $\mathfrak{h}^{\mathbb{C}}$,

Definition

$$\chi_T = \frac{2}{N} \sum_{\alpha \in \Delta_Q^+} \alpha$$

(N dual Coxeter number, genus of the Jordan triple)

defines a character on $\mathfrak{h}^{\mathbb{C}}$,

$$d = \deg(E(\chi_T)),$$

Definition

$$\chi_T = \frac{2}{N} \sum_{\alpha \in \Delta_Q^+} \alpha$$

(N dual Coxeter number, genus of the Jordan triple)

defines a character on $\mathfrak{h}^{\mathbb{C}}$,

$d = \deg(E(\chi_T))$, the Toledo invariant

Definition

$$\chi_T = \frac{2}{N} \sum_{\alpha \in \Delta_Q^+} \alpha$$

(N dual Coxeter number, genus of the Jordan triple)

defines a character on $\mathfrak{h}^{\mathbb{C}}$, the Toledo character

$d = \deg(E(\chi_T))$, the Toledo invariant

Definition

$$\chi_T = \frac{2}{N} \sum_{\alpha \in \Delta_Q^+} \alpha$$

(N dual Coxeter number, genus of the Jordan triple)

defines a character on $\mathfrak{h}^{\mathbb{C}}$, the Toledo character

$d = \deg(E(\chi_T))$, the Toledo invariant

In the tube-type case:

$$\det\ (h \cdot X) = \chi_T(h) \det\ (X)$$

Definition

$$\chi_T = \frac{2}{N} \sum_{\alpha \in \Delta_Q^+} \alpha$$

(N dual Coxeter number, genus of the Jordan triple)

defines a character on $\mathfrak{h}^{\mathbb{C}}$, the Toledo character

$d = \deg(E(\chi_T))$, the Toledo invariant

In the tube-type case:

$$\det\ (h \cdot X) = \chi_T(h) \det\ (X)$$

$$X \in \mathfrak{m}^+, h \in H^{\mathbb{C}}$$

Definition

$$\chi_T = \frac{2}{N} \sum_{\alpha \in \Delta_Q^+} \alpha$$

(N dual Coxeter number, genus of the Jordan triple)

defines a character on $\mathfrak{h}^{\mathbb{C}}$, the Toledo character

$d = \deg(E(\chi_T))$, the Toledo invariant

In the tube-type case:

$$\det{}^q(h \cdot X) = \chi_T(h) \det{}^q(X)$$

$$X \in \mathfrak{m}^+, h \in H^{\mathbb{C}}$$

Definition

$$\chi_T = \frac{2}{N} \sum_{\alpha \in \Delta_Q^+} \alpha$$

(N dual Coxeter number, genus of the Jordan triple)

defines a character on $\mathfrak{h}^{\mathbb{C}}$, the Toledo character

$d = \deg(E(\chi_T))$, the Toledo invariant

In the tube-type case:

$$\det\ (h \cdot X) = \chi_T(h) \det\ (X)$$

$$X \in \mathfrak{m}^+, h \in H^{\mathbb{C}}$$

Lifting of χ_T to the group $H^{\mathbb{C}}$

Lifting of χ_T to the group $H^{\mathbb{C}}$
Smallest rational multiple $q_T \cdot \chi_T$ lifting

Lifting of χ_T to the group $H^{\mathbb{C}}$
Smallest rational multiple $q_T \cdot \chi_T$ lifting

$$q_T = \frac{l \cdot N}{\dim \mathfrak{m} \cdot o(e^{2\pi J})}$$

Lifting of χ_T to the group $H^{\mathbb{C}}$
Smallest rational multiple $q_T \cdot \chi_T$ lifting

$$q_T = \frac{l \cdot N}{\dim \mathfrak{m} \cdot o(e^{2\pi J})}$$

where $l := |Z_0^{\mathbb{C}} \cap [H^{\mathbb{C}}, H^{\mathbb{C}}]|$

Lifting of χ_T to the group $H^{\mathbb{C}}$
Smallest rational multiple $q_T \cdot \chi_T$ lifting

$$q_T = \frac{l \cdot N}{\dim \mathfrak{m} \cdot o(e^{2\pi J})}$$

where $l := |Z_0^{\mathbb{C}} \cap [H^{\mathbb{C}}, H^{\mathbb{C}}]|$
and $o(e^{2\pi J})$

Lifting of χ_T to the group $H^{\mathbb{C}}$
Smallest rational multiple $q_T \cdot \chi_T$ lifting

$$q_T = \frac{l \cdot N}{\dim \mathfrak{m} \cdot o(e^{2\pi J})}$$

where $l := |Z_0^{\mathbb{C}} \cap [H^{\mathbb{C}}, H^{\mathbb{C}}]|$
and $o(e^{2\pi J})$ depend genuinely on the group,

Lifting of χ_T to the group $H^{\mathbb{C}}$
Smallest rational multiple $q_T \cdot \chi_T$ lifting

$$q_T = \frac{l \cdot N}{\dim \mathfrak{m} \cdot o(e^{2\pi J})}$$

where $l := |Z_0^{\mathbb{C}} \cap [H^{\mathbb{C}}, H^{\mathbb{C}}]|$
and $o(e^{2\pi J})$ depend genuinely on the group,

while N and $\dim \mathfrak{m}$ depend on the algebra

In any case, for $m \in \mathfrak{m}^+$,

In any case, for $m \in \mathfrak{m}^+$,

$$\mathrm{Ker}(\mathrm{ad}\, m_{|\mathfrak{h}^{\mathbb{C}}}) \oplus \mathrm{Im}(\mathrm{ad}\, m_{|\mathfrak{m}^-}) \subset \mathfrak{h}^{\mathbb{C}}$$

In any case, for $m \in \mathfrak{m}^+$,

$$\mathrm{Ker}(\mathrm{ad}\, m_{|\mathfrak{h}^{\mathbb{C}}}) \oplus \mathrm{Im}(\mathrm{ad}\, m_{|\mathfrak{m}^-}) \subset \mathfrak{h}^{\mathbb{C}}$$

defines a parabolic subalgebra,

In any case, for $m \in \mathfrak{m}^+$,

$$\mathrm{Ker}(\mathrm{ad}\, m_{|\mathfrak{h}^{\mathbb{C}}}) \oplus \mathrm{Im}(\mathrm{ad}\, m_{|\mathfrak{m}^-}) \subset \mathfrak{h}^{\mathbb{C}}$$

defines a parabolic subalgebra, and corresponding subgroup P.

In any case, for $m \in \mathfrak{m}^+$,

$$\mathrm{Ker}(\mathrm{ad}\, m_{|\mathfrak{h}^{\mathbb{C}}}) \oplus \mathrm{Im}(\mathrm{ad}\, m_{|\mathfrak{m}^-}) \subset \mathfrak{h}^{\mathbb{C}}$$

defines a parabolic subalgebra, and corresponding subgroup P.

$$\left(\begin{array}{ccc|ccccc}
* & * & * & & & & & \\
 & * & * & & & & & \\
 & * & * & & & & & \\
\hline
 & & m & * & * & * & * & * \\
 & m & & * & * & * & * & * \\
 & & & & & * & * & * \\
 & & & & & * & * & * \\
 & & & & & * & * & *
\end{array}\right)$$

In any case, for $m \in \mathfrak{m}^+$,

$$\mathrm{Ker}(\mathrm{ad}\, m_{|\mathfrak{h}^{\mathbb{C}}}) \oplus \mathrm{Im}(\mathrm{ad}\, m_{|\mathfrak{m}^-}) \subset \mathfrak{h}^{\mathbb{C}}$$

defines a parabolic subalgebra, and corresponding subgroup P.

For $\beta \in H^0(E^K(\mathfrak{m}^+))$,

In any case, for $m \in \mathfrak{m}^+$,

$$\mathrm{Ker}(\mathrm{ad}\, m_{|\mathfrak{h}^{\mathbb{C}}}) \oplus \mathrm{Im}(\mathrm{ad}\, m_{|\mathfrak{m}^-}) \subset \mathfrak{h}^{\mathbb{C}}$$

defines a parabolic subalgebra, and corresponding subgroup P.

For $\beta \in H^0(E^K(\mathfrak{m}^+))$,

$$\mathrm{Ker}(\mathrm{ad}\, \beta_{|E(\mathfrak{h}^{\mathbb{C}})}) \oplus \mathrm{Im}(\mathrm{ad}\, \beta_{E(\mathfrak{m}^-)}) \otimes K^{-1} \subset E(\mathfrak{h}^{\mathbb{C}})$$

In any case, for $m \in \mathfrak{m}^+$,

$$\mathrm{Ker}(\mathrm{ad}\, m_{|\mathfrak{h}^{\mathbb{C}}}) \oplus \mathrm{Im}(\mathrm{ad}\, m_{|\mathfrak{m}^-}) \subset \mathfrak{h}^{\mathbb{C}}$$

defines a parabolic subalgebra, and corresponding subgroup P.

For $\beta \in H^0(E^K(\mathfrak{m}^+))$,

$$\mathrm{Ker}(\mathrm{ad}\, \beta_{|E(\mathfrak{h}^{\mathbb{C}})}) \oplus \mathrm{Im}(\mathrm{ad}\, \beta_{E(\mathfrak{m}^-)}) \otimes K^{-1} \subset E(\mathfrak{h}^{\mathbb{C}})$$

defines a reduction to P,

In any case, for $m \in \mathfrak{m}^+$,

$$\mathrm{Ker}(\mathrm{ad}\, m_{|\mathfrak{h}^{\mathbb{C}}}) \oplus \mathrm{Im}(\mathrm{ad}\, m_{|\mathfrak{m}^-}) \subset \mathfrak{h}^{\mathbb{C}}$$

defines a parabolic subalgebra, and corresponding subgroup P.

For $\beta \in H^0(E^K(\mathfrak{m}^+))$,

$$\mathrm{Ker}(\mathrm{ad}\, \beta_{|E(\mathfrak{h}^{\mathbb{C}})}) \oplus \mathrm{Im}(\mathrm{ad}\, \beta_{E(\mathfrak{m}^-)}) \otimes K^{-1} \subset E(\mathfrak{h}^{\mathbb{C}})$$

defines a reduction to P, thanks to G/P compact.

In any case, for $m \in \mathfrak{m}^+$,

$$\mathrm{Ker}(\mathrm{ad}\, m_{|\mathfrak{h}^{\mathbb{C}}}) \oplus \mathrm{Im}(\mathrm{ad}\, m_{|\mathfrak{m}^-}) \subset \mathfrak{h}^{\mathbb{C}}$$

defines a parabolic subalgebra, and corresponding subgroup P.

For $\beta \in H^0(E^K(\mathfrak{m}^+))$,

$$\mathrm{Ker}(\mathrm{ad}\, \beta_{|E(\mathfrak{h}^{\mathbb{C}})}) \oplus \mathrm{Im}(\mathrm{ad}\, \beta_{E(\mathfrak{m}^-)}) \otimes K^{-1} \subset E(\mathfrak{h}^{\mathbb{C}})$$

defines a reduction to P, thanks to G/P compact.

$\chi_T - \chi_{T'}$ is an antidominant character of P

In any case, for $m \in \mathfrak{m}^+$,

$$\mathrm{Ker}(\mathrm{ad}\, m_{|\mathfrak{h}^{\mathbb{C}}}) \oplus \mathrm{Im}(\mathrm{ad}\, m_{|\mathfrak{m}^-}) \subset \mathfrak{h}^{\mathbb{C}}$$

defines a parabolic subalgebra, and corresponding subgroup P.

For $\beta \in H^0(E^K(\mathfrak{m}^+))$,

$$\mathrm{Ker}(\mathrm{ad}\, \beta_{|E(\mathfrak{h}^{\mathbb{C}})}) \oplus \mathrm{Im}(\mathrm{ad}\, \beta_{E(\mathfrak{m}^-)}) \otimes K^{-1} \subset E(\mathfrak{h}^{\mathbb{C}})$$

defines a reduction to P, thanks to G/P compact.

$\chi_T - \chi_{T'}$ is an antidominant character of P

β gives a reduction to P

β gives a reduction to P (same for γ)

β gives a reduction to P (same for γ)

$\chi_T - \chi_{T'}$ is an antidominant character of P

β gives a reduction to P (same for γ)
$\chi_T - \chi_{T'}$ is an antidominant character of P

$$\det(h \cdot X) = \chi_T(h) \det(X)$$

β gives a reduction to P (same for γ)
$\chi_T - \chi_{T'}$ is an antidominant character of P

$$\det(h \cdot X) = \chi_T(h) \det(X)$$

α-semistability

β gives a reduction to P (same for γ)
$\chi_T - \chi_{T'}$ is an antidominant character of P

$$\det(h \cdot X) = \chi_T(h) \det(X)$$

α-semistability

Theorem (α-Milnor-Wood inequality)

Let $\alpha \in i\mathfrak{z}$ such that $\alpha = i\lambda J$ for $\lambda \in \mathbb{R}$. Let (E, β, γ) be an α-semistable G-Higgs bundle. Then, the Toledo invariant $d = \frac{1}{q_T} \deg(E(\widetilde{\chi}_T))$ satisfies:

β gives a reduction to P (same for γ)
$\chi_T - \chi_{T'}$ is an antidominant character of P

$$\det(h \cdot X) = \chi_T(h) \det(X)$$

α-semistability

Theorem (α-Milnor-Wood inequality)

Let $\alpha \in i\mathfrak{z}$ such that $\alpha = i\lambda J$ for $\lambda \in \mathbb{R}$. Let (E, β, γ) be an α-semistable G-Higgs bundle. Then, the Toledo invariant $d = \frac{1}{q_T} \deg(E(\widetilde{\chi}_T))$ satisfies:

$$-\operatorname{rk}(\beta)(2g-2) - \left(\frac{2\dim \mathfrak{m}}{N} - \operatorname{rk}(\beta)\right)\lambda \leqslant d$$

$$d \leqslant \operatorname{rk}(\gamma)(2g-2) + \left(\frac{2\dim \mathfrak{m}}{N} - \operatorname{rk}(\gamma)\right)\lambda.$$

β gives a reduction to P (same for γ)
$\chi_T - \chi_{T'}$ is an antidominant character of P

$$\det(h \cdot X) = \chi_T(h) \det(X)$$

α-semistability

$$-\operatorname{rk}(\beta)(2g-2) \leqslant d \leqslant \operatorname{rk}(\gamma)(2g-2)$$

β gives a reduction to P (same for γ)
$\chi_T - \chi_{T'}$ is an antidominant character of P

$$\det(h \cdot X) = \chi_T(h) \det(X)$$

α-semistability

MAXIMAL TOLEDO: $|d| = \mathrm{rk}(G/H)(2g-2)$

β gives a reduction to P (same for γ)
$\chi_T - \chi_{T'}$ is an antidominant character of P

$$\det(h \cdot X) = \chi_T(h) \det(X)$$

α-semistability

MAXIMAL TOLEDO: $|d| = \mathrm{rk}(G/H)(2g-2)$

β gives a reduction to P (same for γ)
$\chi_T - \chi_{T'}$ is an antidominant character of P

$$\det(h \cdot X) = \chi_T(h) \det(X)$$

α-semistability

MAXIMAL TOLEDO: $|d| = \mathrm{rk}(G/H)(2g-2)$

β gives a reduction to P (same for γ)
$\chi_T - \chi_{T'}$ is an antidominant character of P

$$\det(h \cdot X) = \chi_T(h) \det(X)$$

α-semistability

MAXIMAL TOLEDO: $|d| = \mathrm{rk}(G/H)(2g-2)$

G of tube type

$$\mathcal{M}_{max}(G) \longrightarrow \mathcal{M}_{K^2}(H^*)$$

$$\mathcal{M}_{max}(G) \longrightarrow \mathcal{M}_{K^2}(H^*)$$

E $H^{\mathbb{C}}$-bundle

$$\mathcal{M}_{max}(G) \longrightarrow \mathcal{M}_{K^2}(H^*)$$

E $H^{\mathbb{C}}$-bundle

$\beta \in$ $H^0(E(\mathfrak{m}^+) \otimes K)$

$$\mathcal{M}_{max}(G) \longrightarrow \mathcal{M}_{K^2}(H^*)$$

E	$H^{\mathbb{C}}$-bundle
$\beta \in$	$H^0(E(\mathfrak{m}^+) \otimes K)$
$\gamma \in$	$H^0(E(\mathfrak{m}^-) \otimes K)$

$$\mathcal{M}_{max}(G) \longrightarrow \mathcal{M}_{K^2}(H^*)$$

E	$H^{\mathbb{C}}$-bundle	F	$H'^{\mathbb{C}}$-bundle
$\beta \in$	$H^0(E(\mathfrak{m}^+) \otimes K)$		
$\gamma \in$	$H^0(E(\mathfrak{m}^-) \otimes K)$		

$$\mathcal{M}_{max}(G) \longrightarrow \mathcal{M}_{K^2}(H^*)$$

E	$H^{\mathbb{C}}$-bundle	F	$H'^{\mathbb{C}}$-bundle
$\beta \in$	$H^0(E(\mathfrak{m}^+) \otimes K)$	$\varphi \in$	$H^0(F(\mathfrak{m}'^{\mathbb{C}}) \otimes K)$
$\gamma \in$	$H^0(E(\mathfrak{m}^-) \otimes K)$		

$$\mathcal{M}_{max}(G) \longrightarrow \mathcal{M}_{K^2}(H^*)$$

E	$H^{\mathbb{C}}$-bundle	F	$H'^{\mathbb{C}}$-bundle
$\beta \in$	$H^0(E(\mathfrak{m}^+) \otimes K)$	$\varphi \in$	$H^0(F(\mathfrak{m}'^{\mathbb{C}}) \otimes K)$
$\gamma \in$	$H^0(E(\mathfrak{m}^-) \otimes K)$		

$\beta \equiv e_\Gamma,$

$$\mathcal{M}_{max}(G) \qquad \longrightarrow \qquad \mathcal{M}_{K^2}(H^*)$$

E	$H^{\mathbb{C}}$-bundle	F	$H'^{\mathbb{C}}$-bundle
$\beta \in$	$H^0(E(\mathfrak{m}^+) \otimes K)$	$\varphi \in$	$H^0(F(\mathfrak{m}'^{\mathbb{C}}) \otimes K)$
$\gamma \in$	$H^0(E(\mathfrak{m}^-) \otimes K)$		

$$\beta \equiv e_\Gamma, \mathfrak{m}^+_{D\neq 0} \cong \frac{H^{\mathbb{C}}}{H'^{\mathbb{C}}},$$

$$\mathcal{M}_{max}(G) \qquad \longrightarrow \qquad \mathcal{M}_{K^2}(H^*)$$

E	$H^{\mathbb{C}}$-bundle	F	$H'^{\mathbb{C}}$-bundle
$\beta \in$	$H^0(E(\mathfrak{m}^+) \otimes K)$	$\varphi \in$	$H^0(F(\mathfrak{m}'^{\mathbb{C}}) \otimes K)$
$\gamma \in$	$H^0(E(\mathfrak{m}^-) \otimes K)$		

$$\beta \equiv e_\Gamma, \mathfrak{m}^+_{D\neq 0} \cong \frac{H^{\mathbb{C}}}{H'^{\mathbb{C}}}, \qquad \bar{\beta} \in H^0(E^K_{/\mathbb{C}^*}(H^{\mathbb{C}}/H'^{\mathbb{C}}))$$

$$\mathcal{M}_{max}(G) \qquad \longrightarrow \qquad \mathcal{M}_{K^2}(H^*)$$

E	$H^{\mathbb{C}}$-bundle	F	$H'^{\mathbb{C}}$-bundle
$\beta \in$	$H^0(E(\mathfrak{m}^+) \otimes K)$	$\varphi \in$	$H^0(F(\mathfrak{m}'^{\mathbb{C}}) \otimes K)$
$\gamma \in$	$H^0(E(\mathfrak{m}^-) \otimes K)$		

$$\beta \equiv e_\Gamma, \mathfrak{m}^+_{D\neq 0} \cong \frac{H^{\mathbb{C}}}{H'^{\mathbb{C}}}, \qquad \bar{\beta} \in H^0(E^K_{/\mathbb{C}^*}(H^{\mathbb{C}}/H'^{\mathbb{C}}))$$

$$\mathfrak{m}^- \cong (\mathfrak{m}^+)^*,$$

$$\mathcal{M}_{max}(G) \qquad \longrightarrow \qquad \mathcal{M}_{K^2}(H^*)$$

E	$H^{\mathbb{C}}$-bundle	F	$H'^{\mathbb{C}}$-bundle
$\beta \in$	$H^0(E(\mathfrak{m}^+) \otimes K)$	$\varphi \in$	$H^0(F(\mathfrak{m}'^{\mathbb{C}}) \otimes K)$
$\gamma \in$	$H^0(E(\mathfrak{m}^-) \otimes K)$		

$$\beta \equiv e_\Gamma, \mathfrak{m}^+_{D\neq 0} \cong \frac{H^{\mathbb{C}}}{H'^{\mathbb{C}}}, \qquad \bar{\beta} \in H^0(E^K_{/\mathbb{C}^*}(H^{\mathbb{C}}/H'^{\mathbb{C}}))$$

$$\mathfrak{m}^- \cong (\mathfrak{m}^+)^*, \mathfrak{m}^+ \cong \mathfrak{m}'^{\mathbb{C}},$$

$$\mathcal{M}_{max}(G) \qquad \longrightarrow \qquad \mathcal{M}_{K^2}(H^*)$$

E	$H^{\mathbb{C}}$-bundle	F	$H'^{\mathbb{C}}$-bundle
$\beta \in$	$H^0(E(\mathfrak{m}^+) \otimes K)$	$\varphi \in$	$H^0(F(\mathfrak{m}'^{\mathbb{C}}) \otimes K)$
$\gamma \in$	$H^0(E(\mathfrak{m}^-) \otimes K)$		

$$\beta \equiv e_\Gamma, \mathfrak{m}^+_{D\neq 0} \cong \frac{H^{\mathbb{C}}}{H'^{\mathbb{C}}}, \qquad \bar{\beta} \in H^0(E^K_{/\mathbb{C}^*}(H^{\mathbb{C}}/H'^{\mathbb{C}}))$$

$$\mathfrak{m}^- \cong (\mathfrak{m}^+)^*, \mathfrak{m}^+ \cong \mathfrak{m}'^{\mathbb{C}}, \qquad \gamma \in H^0(F(\mathfrak{m}'^{\mathbb{C}}) \otimes K^2)$$

$$\mathcal{M}_{max}(G) \qquad \longrightarrow \qquad \mathcal{M}_{K^2}(H^*)$$

E	$H^{\mathbb{C}}$-bundle	F	$H'^{\mathbb{C}}$-bundle
$\beta \in$	$H^0(E(\mathfrak{m}^+) \otimes K)$	$\varphi \in$	$H^0(F(\mathfrak{m}'^{\mathbb{C}}) \otimes K)$
$\gamma \in$	$H^0(E(\mathfrak{m}^-) \otimes K)$		

$$\beta \equiv e_\Gamma, \mathfrak{m}^+_{D\neq 0} \cong \frac{H^{\mathbb{C}}}{H'^{\mathbb{C}}}, \qquad \bar{\beta} \in H^0(E^K_{/\mathbb{C}^*}(H^{\mathbb{C}}/H'^{\mathbb{C}}))$$

$$\mathfrak{m}^- \cong (\mathfrak{m}^+)^*, \mathfrak{m}^+ \cong \mathfrak{m}'^{\mathbb{C}}, \qquad \gamma \in H^0(F(\mathfrak{m}'^{\mathbb{C}}) \otimes K^2)$$

$$\mathcal{M}_{max}(G) \qquad \longrightarrow \qquad \mathcal{M}_{K^2}(H^*)$$

E	$H^{\mathbb{C}}$-bundle	F	$H'^{\mathbb{C}}$-bundle
$\beta \in$	$H^0(E(\mathfrak{m}^+) \otimes K)$	$\varphi \in$	$H^0(F(\mathfrak{m}'^{\mathbb{C}}) \otimes K)$
$\gamma \in$	$H^0(E(\mathfrak{m}^-) \otimes K)$		

$$\beta \equiv e_\Gamma, \mathfrak{m}^+_{D\neq 0} \cong \frac{H^{\mathbb{C}}}{H'^{\mathbb{C}}}, \qquad \bar{\beta} \in H^0(E^K_{/\mathbb{C}^*}(H^{\mathbb{C}}/H'^{\mathbb{C}}))$$

$$\mathfrak{m}^- \cong (\mathfrak{m}^+)^*, \mathfrak{m}^+ \cong \mathfrak{m}'^{\mathbb{C}}, \qquad \gamma \in H^0(F(\mathfrak{m}'^{\mathbb{C}}) \otimes K^2)$$

Theorem (Cayley correspondence)

Let G be a simple Hermitian group of tube type and H be a maximal compact subgroup. Let H^* be the non-compact dual of H in $H^{\mathbb{C}}$. Let J be the element in the centre of the Lie algebra $\mathfrak{g}$ giving the almost complex structure on $\mathfrak{m}$. If the order of $e^{2\pi J} \in H^{\mathbb{C}}$ divides $(2g-2)$, then there is an injection of complex algebraic varieties

$$\mathcal{M}_{\max}(G) \to \mathcal{M}_{K^2}(H^*).$$

Moreover, stable G-Higgs bundles correspond to stable K^2-twisted H^*-Higgs pairs.

Already known in the classical cases (Bradlow, García-Prada, Gothen, Mundet i Riera),

Already known in the classical cases (Bradlow, García-Prada, Gothen, Mundet i Riera),where it is actually a homeomorphism.

Already known in the classical cases (Bradlow, García-Prada, Gothen, Mundet i Riera),where it is actually a homeomorphism.

Main novelties of our approach:

Already known in the classical cases (Bradlow, García-Prada, Gothen, Mundet i Riera),where it is actually a homeomorphism.

Main novelties of our approach:

- General proof using the Jordan algebra structure of $\mathfrak{m}^+$ and the geometry of the Hermitian symmetric space.

Already known in the classical cases (Bradlow, García-Prada, Gothen, Mundet i Riera),where it is actually a homeomorphism.

Main novelties of our approach:

- General proof using the Jordan algebra structure of $\mathfrak{m}^+$ and the geometry of the Hermitian symmetric space.
- Extension to exceptional groups,

Already known in the classical cases (Bradlow, García-Prada, Gothen, Mundet i Riera),where it is actually a homeomorphism.

Main novelties of our approach:

- General proof using the Jordan algebra structure of $\mathfrak{m}^+$ and the geometry of the Hermitian symmetric space.
- Extension to exceptional groups, quotients and coverings.

Already known in the classical cases (Bradlow, García-Prada, Gothen, Mundet i Riera),where it is actually a homeomorphism.

Main novelties of our approach:

- General proof using the Jordan algebra structure of $\mathfrak{m}^+$ and the geometry of the Hermitian symmetric space.
- Extension to exceptional groups, quotients and coverings.
- Role played by invariants of the group

Already known in the classical cases (Bradlow, García-Prada, Gothen, Mundet i Riera),where it is actually a homeomorphism.

Main novelties of our approach:

- General proof using the Jordan algebra structure of $\mathfrak{m}^+$ and the geometry of the Hermitian symmetric space.
- Extension to exceptional groups, quotients and coverings.
- Role played by invariants of the group , e.g., $o(e^{2\pi J})$.

G of non-tube type

For maximal polystable objects:

For maximal polystable objects:

Reduction from max. β + char. $\chi_T - \chi_{T'}$

For maximal polystable objects:

Reduction from max. β + char. $\chi_T - \chi_{T'} \Rightarrow$ strictly polystable.

For maximal polystable objects:
Reduction from max. β + char. $\chi_T - \chi_{T'} \Rightarrow$ strictly polystable.

Maximal G-bundle reduces to $N_G(\mathfrak{g}_T)_0$-bundle.

For maximal polystable objects:
Reduction from max. β + char. $\chi_T - \chi_{T'} \Rightarrow$ strictly polystable.

Maximal G-bundle reduces to $N_G(\mathfrak{g}_T)_0$-bundle.

Theorem

Let G be a simple Hermitian group of non-tube type and let H be its maximal compact subgroup. Then, there are no stable G-Higgs bundles with maximal Toledo invariant. In fact, every polystable maximal G-Higgs bundle reduces to a stable $N_G(\mathfrak{g}_T)_0$-Higgs bundle, where $N_G(\mathfrak{g}_T)_0$ is the identity component of the normalizer of $\mathfrak{g}_T$ in G.

Already known for $\mathrm{SU}(p,q)$, $\mathrm{SO}^*(4m+2)$

Already known for $\mathrm{SU}(p,q)$, $\mathrm{SO}^*(4m+2)$
(Bradlow, García-Prada, Gothen).

Already known for $\mathrm{SU}(p,q)$, $\mathrm{SO}^*(4m+2)$
(Bradlow, García-Prada, Gothen).

where one also has

Already known for $\mathrm{SU}(p,q)$, $\mathrm{SO}^*(4m+2)$
(Bradlow, García-Prada, Gothen).

where one also has

$\mathcal{M}_{max}(G)$ fibers over $M_0(N_{H^{\mathbb{C}}}(H_T^{\mathbb{C}})/H_T^{\mathbb{C}})$,
with fibre $\cong \mathcal{M}_{max}(G_T)$

Already known for $\mathrm{SU}(p,q)$, $\mathrm{SO}^*(4m+2)$
(Bradlow, García-Prada, Gothen).

where one also has

$\mathcal{M}_{max}(G)$ fibers over $M_0(N_{H^{\mathbb{C}}}(H_T^{\mathbb{C}})/H_T^{\mathbb{C}})$,
with fibre $\cong \mathcal{M}_{max}(G_T)$

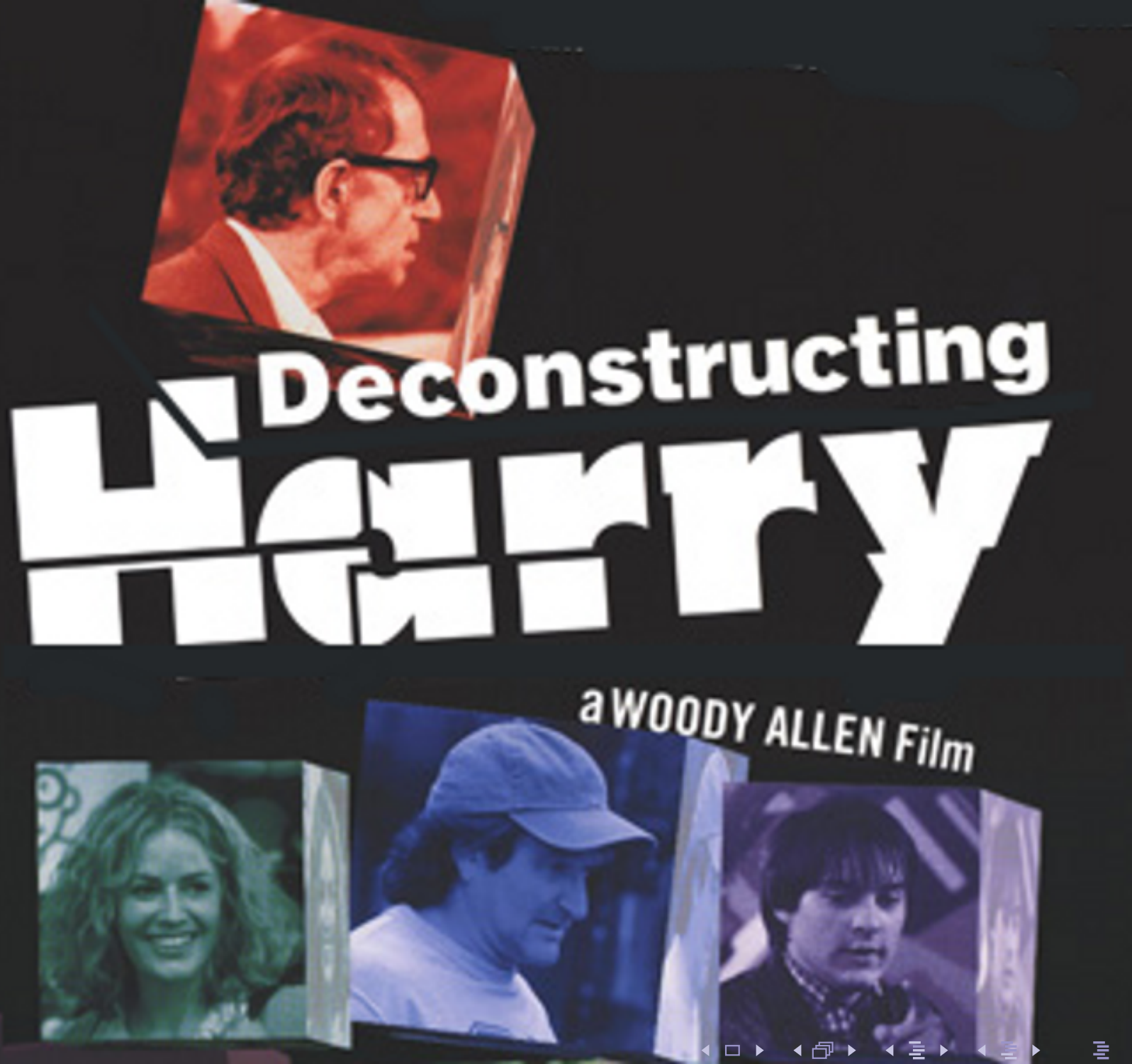
Deconstructing
Harry
a WOODY ALLEN Film

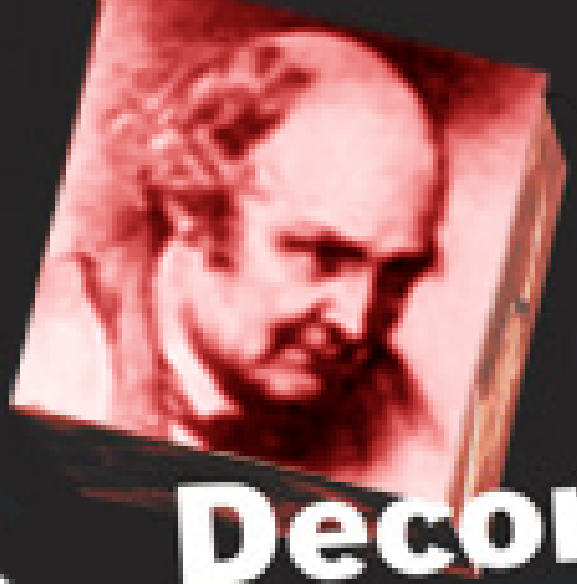

Deconstructing Cayley

a ROBERTO RUBIO thesis

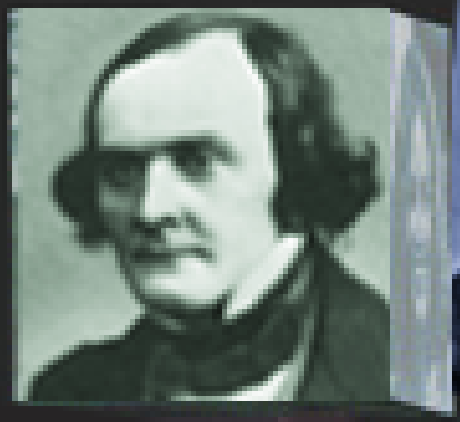

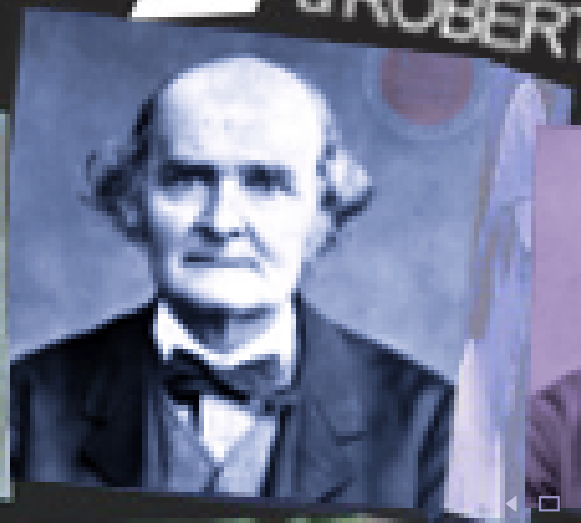

Higgs bundles and Hermitian symmetric spaces